2020 VX ONE CLASS RULES

Effective January 1, 2020

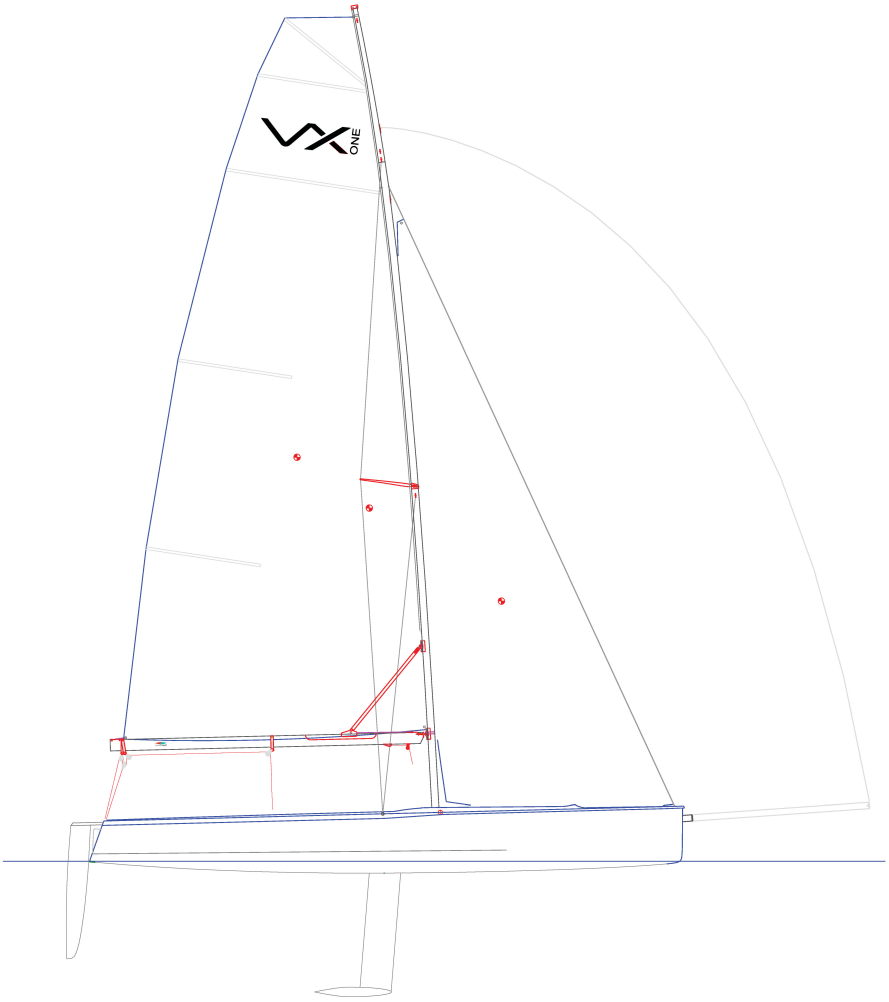

The VX ONE was designed in 2011 by Brian Bennett and Roger Martin Yacht Design and was adopted as a class association in April 2012.

Copyright © VX ONE Class Association

CLASS RULES / INDEX

PART I – ADMINISTRATION

Section A – General

A.1 Language 4
A.2 Abbreviations 4
A.3 Authorities 4
A.4 Administration of the Class 4
A.5 International Rules..... 4
A.6 **Class Rules** Changes..... 4
A.7 **Class Rules** Amendments..... 5
A.8 **Class Rules** Interpretation 5
A.9 Class Fee and Build Plaque..... 5
A.10 Licensed Manufacturers 5
A.11 **Hull**, **Sail** and Bow Numbers 5

Section B – Boat Eligibility

B.1 **Class Rules** 6
B.2 Class Association Markings 6
B.3 VX ONE Labels..... 6
B.4 **Equipment Inspection** 6

PART II – REQUIREMENTS AND LIMITATIONS

Section C – Conditions for *Racing*

C.1 General 7
C.2 **Crew** 7
C.3 **Personal Equipment** 8
C.4 Advertising 8
C.5 **Portable Equipment** 8
C.6 **Boat** 9
C.7 **Hull** 10
C.8 **Hull Appendages** 10
C.9 **Rig** and **Rigging** 11
C.10 **Sails** 14

Section D– Hull

D.1 Manufacturers 15
D.2 Measurement..... 15
D.3 Materials, Construction and Dimensions..... 15

Section E – Hull Appendages

E.1 Manufacturers 15
E.2 Parts 15
E.3 Materials, Construction and Dimensions..... 15
E.4 Keel Assembly 15
E.5 **Rudder**,Tiller and TillerExtension..... 16

Section F – Rig

F.1 Manufacturers 17
F.2 Parts 17
F.3 Measurement..... 17
F.4 Materials, Construction and Dimensions..... 17
F.5 **Standing Rigging** 17
F.6 **Running Rigging** 17

Section G – Sails

G.1 Parts 19
G.2 General 19
G.3 **Mainsail** 20
G.4 Jib 22
G.5 Gennaker..... 23

PART III – APPENDICES

H.1 Insignia 25
H.2 Certified Equipment Label..... 26
H.3 Bow Numbers..... 27
H.4 *Racing* Guidelines..... 28

INTRODUCTION

The VX ONE Class has been created as a strict one-design class where the true test when raced is between **crews**, not **boats** and equipment.

VX ONE **hulls**, **keel** assembly, **rudder**, **rig** and **standing rigging** shall only be supplied by entities licensed by the TMH and referred to in the **class rules** as a Licensed Manufacturer. Certified Equipment shall comply with the VX ONE Builders Construction Manual.

VX ONE **hulls**, **keel** assembly, **rudder**, **rig** and **standing rigging**, may, after having left the manufacturer, only be altered to the extent permitted in Section C of the **class rules**. Owners and **crews** should be aware that compliance with rules in Section C is the responsibility of the competitor.

VX ONE **sails** are measurement controlled and may be manufactured by any sailmaker. **Sails** shall be measured by an approved measurer and appropriate markings placed on the **sails** to show **sail** measurement has been performed and comply with these **class rules**.

Rules regulating the use of equipment during a race are contained in Section C of these **class rules**, in **ERS** Part I and in the *Racing Rules of Sailing*.

THESE RULES ARE **CLOSED CLASS RULES** WHERE ANYTHING NOT SPECIFICALLY PERMITTED BY THE CLASS RULES IS PROHIBITED.

COMPONENTS, AND THEIR USE, ARE DEFINED BY THEIR DESCRIPTION.

PART I – ADMINISTRATION

Section A – General

A.1 LANGUAGE

A.1.1 The official language of the VX ONE class is English, and in case of dispute over translation the English text shall prevail.

A.1.2 The word “shall” is mandatory, and the word “may” is permissive.

A.2 ABBREVIATIONS

A.2.1 WORLD SAILING International Sailing Federation

MNA	WORLD SAILING Member National Authority
VXCA	VX ONE Class Association
NCA	National Class Association
ERS	Equipment Rules of Sailing
RRS	*Racing Rules of Sailing*
TMH	Trademark Holder (Brian Bennett)
VXCC	VX ONE Class Constitution

A.3 AUTHORITIES

A.3.1 The international authority of the class is the VXCA which shall co-operate with the TMH in matters concerning these **class rules**.

A.3.2 The VXCA is under no legal obligation with respect to these **class rules**.

A.4 ADMINISTRATION OF THE CLASS

The TMH has delegated its administrative functions of the class to the VXCA. The VXCA may delegate part or all of its functions, as stated in these **class rules**, to an administrator.

A.5 INTERNATIONAL RULES

A.5.1 These **class rules** shall be read in conjunction with the **ERS**.

A.5.2 Except where used in headings, when a term is printed in “**bold**” the definition in the **ERS** applies, and when a term is printed in “*italics*” the definition in the RRS applies.

A.6 CLASS RULES CHANGES

A.6.1 RRS 87 applies: **Class rules** may be changed by the sailing instructions.

A.6.2 RRS 87 applies: **Class rules** may be changed when written permission of the VXCA is displayed on the Official Notice Board.

A.7 CLASS RULES AMENDMENTS

Amendments to these **class rules** are subject to the approval of the board as described in the VXCC.

A.8 CLASS RULES INTERPRETATION

A.8.1 Interpretation of **class rules** shall be made by the Technical Committee in consultation with the TMH.

A.8.2 Interpretation of **class rules** at an event shall be carried out in accordance with the RRS. The event organizing authority shall, as soon as practical after the event, inform the VXCA of any interpretations.

A.9 CLASS FEES AND BUILD PLAQUE

(UNDER REVIEW)

A.10 LICENSED MANUFACTURERS

VX ONE Certified Equipment shall only be manufactured by those licensed by the TMH. Such licensees shall be referred to as Licensed Manufacturers in these **class rules**.

A.11 HULL, SAIL AND BOW NUMBERS

A.11.1 **Hull** numbers shall be issued by the TMH.

A.11.2 **Hull** numbers shall be issued in consecutive order starting at “100”.

A.11.3 The **mainsail** and optional bow numbers shall reference the **hull** number.

A.11.4 A unique **mainsail sail** number may be used when there are no conflicts with a **boat** using a **sail** number corresponding with her **hull** number.

Section B – Equipment Eligibility

For a **boat** to be eligible for *racing*, it shall comply with the rules in this section.

B.1 CLASS RULES

The **boat** shall be in compliance with the **class rules.**

B.2 CLASS ASSOCIATION MARKINGS

B.2.1 A current VX ONE Class Association sticker shall be affixed to the **hull** on the starboard transom.

B.2.2 A VX ONE Class Association royalty sticker shall be affixed to each **sail** in proximity of the **tack**.

B.3 VX ONE LABELS

B.3.1 The VX ONE insignia shall be affixed to the cockpit side tanks per Appendix H.1.

B.3.2 Each **hull**, **mast**, **keel** assembly and **rudder** shall be labelled with a VX ONE Certified Equipment label as shown in Appendix H.2. Certified equipment labels shall be installed by a licensed manufacturer or TMH.

B.4 EQUIPMENT INSPECTION

A role of **Equipment Inspectors** at an event is to verify that equipment has been produced by a Licensed Manufacturer and has not been subsequently altered, other than as is permitted within these rules, using whatever inspection methods they deem appropriate, including comparison with a reference sample of the type of equipment presented for inspection. Should this comparison reveal deviation greater than what the **Equipment Inspector** considers being within manufacturing tolerances, the matter shall be reported to the race committee.

Such occurrences shall be reported to the TMH and the VXCA Technical Committee as soon as practical for investigation and a ruling on the eligibility of the equipment for *racing*.

PART II – REQUIREMENTS AND LIMITATIONS

The **crew** and the **boat** shall comply with the rules in Part II when *racing*. In case of conflict Section C shall prevail.

The rules in Part II are **closed class rules**. **Certification control** and **equipment inspection** shall be carried out in accordance with the **ERS** except where varied in this Part.

Section C – Conditions for Racing

Section C contains rules and requirements during an event, including *racing*, and permitted alterations to VX One **hulls**, **hull appendages**, **rigs**, **rigging** and **sails**.

C.1 GENERAL

C.1.1 RULES

(a) RRS 50.4 shall not apply.

(b) RRS 42.2 (a) is changed as follows: Unlimited trimming and easing of the asymmetrical gennaker to promote a plane shall be permitted.

(c) The **ERS** Part I – Use of Equipment shall apply.

C.1.2 OUTSIDE ASSISTANCE

Except in an emergency a **boat** shall receive no outside assistance from: radio communication including cell phones, visual or vocal signalling, or transfer of equipment or victuals from support boats not available to all competitors from the time she reaches the *racing* area until she leaves the *racing* area after the last race of the day or when she *retires from racing*.

C.2 CREW

C.2.1 LIMITATIONS

(a) The **crew** shall consist of a minimum of 2 persons. Any member of the **crew** may act as helmsperson at any time if they meet the provisions of C.2.1 (d).

(b) No **crew** member shall be substituted during an event unless express written consent is granted by the Jury or Race Committee. If a **crew** substitution is requested, the total **crew** weight shall not change by more than 10 kg.

(c) Any sailor may skipper or **crew** only if they are not or will not be compensated for competing. Skipper and **crew** shall sign a declaration of compliance.

(d) In a class sanctioned event each helmsperson shall be a VXCA active or associate member in good standing with the VXCA.

(e) Fifteen or more days prior to the first day of an event, a different helm or **crew**, of different weights, may be specified for each day of *racing* by listing each **crew** member for each day of *racing*. The daily **crew** list shall be submitted to the VXCA Executive Committee and Race Committee without the requirement of written consent.

C.3 PERSONAL EQUIPMENT

C.3.1 MANDATORY

(a) While *racing* each **crew** shall wear a **personal flotation device**.

C.3.2 RRS 43.1 (a), (b) and (c) shall apply

C.4 ADVERTISING

C.4.1 LIMITATIONS

Advertising shall only be displayed in accordance with the WORLD SAILING Advertising Code. (See WORLD SAILING Regulation 20)

C.5 PORTABLE EQUIPMENT

C.5.1 MANDATORY

(a) FOR USE

(1) Safety equipment shall meet the specifications of the local authority.

(2) A tow line consisting of not more than two lines with a combined length of not less than 20 meters, and with a diameter of not less than 6 mm shall be carried aboard while *racing*. Use of **running rigging** to satisfy this requirement is prohibited.

(3) One paddle

C.5.2 OPTIONAL

(a) FOR USE

(1) Electronic or mechanical timing devices

(2) Non-wired electronic devices

(3) VHF radio

(4) Mooring line

(5) Wind direction indicator(s)

(6) Magnetic compass

(7) Spare parts and tools

(8) Hand-held wind reading device

C.6 BOAT

C.6.1 WEIGHT

(a) The minimum weight of the **boat** in dry condition shall be 255 kg.

(b) **Corrector weights** of lead shall be permanently fastened when the **boat** weight is less than 255 kg.

(c) **Corrector weight** location: 50% shall be bolted to the inside of the rudder pod on the portside or located on the **hull** surface beneath the **rudder** pod and 50% shall be equally divided and located outboard under the aft lip of the deck hood. When 1 kg or less of **corrector weight** is required the entire weight shall be affixed inside the rudder pod.

C.6.2 WEIGHING

(a) The following shall be included:

Keel assembly, **rudder**, tiller, and tiller extension, permanently fixed fittings, sheets and control lines.

(b) The following may be included:

Wind indicator(s), maximum two compasses and brackets, **shroud** adjustment and securing apparatus, permanently secured non-skid and stowage apparatus.

(c) The following shall be excluded:

All equipment listed in C.5 not permitted in C.6.2(b).

(d) The lifting bridle and **keel** lifting tackle, if used, shall be subtracted from the weight.

(e) Water shall be drained from the **hull** and keel cavities.

C.6.3 MODIFICATIONS, MAINTENANCE AND REPAIR

(a) The use of shock cord or adhesive tape is in general unrestricted, except that such material shall not be used in such a way as to create a fitting or extend a function of a permitted fitting.

(b) Protective coverings made of any soft material over exposed fittings are permitted. Such coverings shall not alter the function of a fitting.

(c) Trim marks may be added.

(d) Gennaker sheet retaining apparatus may be added.

(e) The jib traveller car track may be shimmed to eliminate binding of the traveller car.

(f) Stowage apparatus for paddle(s), **sail** bags and other equipment may be added.

C.7 HULL

C.7.1 MODIFICATIONS, MAINTENANCE AND REPAIR

(a) Replacement or addition of non-skid is permitted.

(b) Drainage plug and inspection ports shall be in place while *racing*.

(c) Routine maintenance such as polishing is permitted.

(d) Minor sanding is permitted on all **hull** surfaces provided the original design geometry is maintained.

(e) Structural damage may be repaired provided no competitive advantage is gained. The repair shall be executed with the intent to restore the original design geometry and mechanical properties.

C.8 HULL APPENDAGES

C.8.1 MODIFICATIONS, MAINTENANCE AND REPAIR

(a) Repair to damage is permitted provided the original design geometry is maintained and no competitive advantage is gained.

C.8.2 LIMITATIONS

(a) Only one **keel** assembly and one **rudder** shall be used during an event except when a **hull appendage** has been lost or damaged beyond repair.

C.8.5 KEEL ASSEMBLY

(a) **Keel** blocks and retaining bolts, studs and nuts, or combination shall be installed to prevent keel movement.

(b) The **keel** blocks may be shimmed to align the **keel** center-plane with the **hull** center-plane.

(c) The **keel** blocks and top plate may be shimmed to meet the design geometry. If shims are used the design geometry shall be met.

(d) **Keel** blocks and top plate shall not be shimmed to adjust the fore and aft angle of the **keel**.

(e) The weed cutter may be removed, and the cutter slot filled or covered with a minimum of thin adhesive film.

(f) Lead may be removed from the **keel** bulb if the **boat** exceeds minimum weight without **corrector weights**.

(g) A stud and nut may be used to secure the keel top plate to **hull** connection. The stud may be tapered.

C.8.6 RUDDER, TILLER AND TILLER EXTENSION

(a) The **rudder** shall be positively secured.

(b) The tiller extension may be of any design or material.

C.9 RIG AND RIGGING

C.9.1 MODIFICATIONS, MAINTENANCE AND REPAIR

(a) During an event, structural damage may be repaired with the intent to restore the original geometry and mechanical properties provided no competitive advantage is gained. The repair shall be approved by a **class measurer** or a **TMH** representative. Following the event, the damaged component(s) shall be replaced.

C.9.2 LIMITATIONS

(a) Only one set of **spars** and **standing rigging** shall be used during an event, except when an item has been lost or damaged and the Race Committee has approved the substitution.

C.9.3 MAST

(a) **MAST DIMENSIONS**

	Minimum	Maximum
1. **Mast** Butt Position: Aft edge of mast tenon (level with the mast tenon track) to deck datum point	3326 mm	3336 mm
2. Top of **lower limit mark** to bottom of **upper limit mark ERS** F.2.2		7026 mm
3. **Limit mark** Width **ERS** F.1.9(a)(i)	18 mm	

C.9.6 **BOOM**

(a) **BOOM DIMENSIONS**

	Minimum	Maximum
Outer Point Distance **ERS** F.3.3(a)		2970 mm
Limit mark width **ERS** F.1.9(a)(i)	18 mm	

C.9.7 GENNAKER **BOWSPRIT**

(a) The **bowsprit** shall be set only with the gennaker.

C.9.8 **STANDING RIGGING**

(a) USE

(1) The **rigging** links and **rigging** turnbuckles shall not be adjusted after the *start* signal.

(b) PERMITTED ADDITIONS AND ALTERATIONS

(1) Apparatus for adjusting and securing **rigging** turnbuckles

(2) Rigid eye-straps may be replaced with soft eye-straps

(3) Apparatus for adjusting the hiking strap securing line length

(c) **RIGGING** DIMENSIONS

	Minimum	Maximum
Forestay Length: **Rigging** point of T tang to bearing point of pin hole.	6652 mm	6656 mm
Forestay Height: **ERS** F.2.3(e) **Mast forestay** tang box bearing point to **mast datum point** (bottom of heel tenon)	6432 mm	6436 mm
Mast Rake: shrouds slack and jib **halyard** at full hoist to hull-deck joint at bow centerline	TBD	TBD

C.9.9 **RUNNING RIGGING**

(a) USE

(1) **Running rigging** shall be led through and attached to the fittings supplied for the function

(b) PERMITTED ADDITIONS AND ALTERATIONS

(1) **Running rigging** may be modified or relocated to match any factory supplied configuration or location.

(2) Control line materials are not restricted.

(3) **Halyards**, sheets and control lines may be tapered

(4) Mainsheet swivel cam arm and block with cleat on centreline of cockpit floor

(5) Mainsheet cleat on the inboard **boom** block

(6) One or two ratchet blocks in the mainsheet purchase

(7) Shackles, strops, line or new jib **halyard** may be used to adjust the jib **tack** height above the furler tri-link fitting.

(8) Apparatus to prevent re-cleating of the gennaker **halyard**

(9) Gennaker sheet pennant limited to 20 cm

(10) Handheld hiking line(s) attached to the **keel** top pad eye or hiking strap attachments.

(11) Jib lead change strop for temporarily adjusting the jib **clew attachment** point.

(12) Cleats, parts or equipment may be replaced provided that the replacement is of similar weight, size or type and performs the same function. Replacement parts or equipment may be obtained from any supplier.

(13) Jam and clam cleats may be replaced with cam cleats

(14) Any block may be replaced with a block of the same number of sheaves of similar or greater diameter.

(15) Any attachment of blocks may be replaced. Attachments for blocks shall be of substantially the same size and design.

(16) Fittings and fixings may be replaced or added, if the function of the fitting or part is not altered and where required to facilitate a repair the fitting may be modified to accommodate slightly larger fixings.

(17) The main **halyard** may have an in-line loop. A single ended purchase system with hook may be used to secure the **halyard**. The purchase shall not exceed 4:1.

(18) The gnav line may be continuous and lead through outboard turning points.

(19) Outhaul purchase maximum 6:1.

C.10 SAILS

C.10.1 MODIFICATION, REPAIR AND REPLACEMENT

(a) A **sail** damaged beyond repair may be replaced with the permission of the Race Committee.

(b) During an event a **sail** shall not be modified after it has been measured.

(c) During an event a damaged **sail** may be repaired and shall be re-measured following substantial repair.

C.10.2 LIMITATIONS

(a) Not more than 1 **mainsail**, 1 jib, 1 primary gennaker and one back-up gennaker may be carried aboard.

(b) Not more than 1 **mainsail**, 1 jib, 1 primary gennaker and one back-up gennaker may be measured for use during an event except when a **sail** has been lost or damaged beyond repair.

(c) The back-up gennaker may be carried by a fleet support boat and may be used if the primary gennaker is damaged.

C.10.3 **MAINSAIL**

(a) USE

(1) The **mainsail throat point** shall be below the lower edge of the **mast upper limit mark**.

(2) The intersection of the **leech** and the top of the **boom**, each extended as necessary, shall not be behind the fore side of the **boom outer limit mark**.

(3) The **luff** bolt rope shall be in the **mast** bolt rope track.

C.10.4 JIB

(a) USE

(1) The use of a zipper **luff** is mandatory.

(2) The jib shall be able to be fully furled.

C.10.5 GENNAKER

(a) USE

(1) When in use, the **sail** shall be hoisted on a **halyard**. The arrangement shall permit hoisting and lowering of the **sail** while afloat.

(2) The **halyard** tail shall be secured to a recovery point on the **sail**.

Section D – Hull

D.1 MANUFACTURERS

(a) The **hull** shall be manufactured by a TMH Licensed Manufacturer.

D.2 MEASUREMENT

(a) **HULL DATUM POINT**

The **hull datum point** is on centreline 25 mm forward of the transom cut line. This shall be identified by a 2 mm dot of contrasting color.

(b) DECK DATUM POINT

The deck datum point is the top aft edge of the top transom pintle.

D.3 MATERIALS, CONSTRUCTION AND DIMENSIONS

Shall comply with the Builders Construction Manual

Section E – Hull Appendages

E.1 MANUFACTURERS

The **keel** assembly and **rudder** shall only be manufactured by a TMH licensed manufacturer.

E.2 PARTS

E.2.1 MANDATORY

(a) **Keel** Assembly

(b) **Keel** Blocks

(c) **Rudder**

(d) Tiller and Tiller Extension

E.2.2 OPTIONAL

(a) **Hull** Extension

E.3 MATERIALS, CONSTRUCTION AND DIMENSIONS

Keel Assembly, **Rudder** and tiller shall comply with the Builders Construction Manual.

E.4 KEEL ASSEMBLY

E.4.1 FITTINGS

(a) MANDATORY

(1) Top plate, Lifting ring and bolts

(2) Retaining bolts and or studs and nuts

(3) Keel Extrusion

(4) Lead bulb and rigid moulded casing

(b) OPTIONAL

(1) Weed Cutter

(2) Filler for weed cutter slot

E.4.2 KEEL ASSEMBLY WEIGHT

	Minimum	Maximum
keel assembly	60.0 kg	76.0 kg

E.4.3 KEEL POSITION:

KEEL	Design Geometry
Keel Depth: Projection from the bottom of the **hull** to the top of the bulb at trailing edge	1100 mm
Keel Position: Trailing edge of keel at the **hull** to transom datum point	TBD 3016-295 =2721? mm

E.5 RUDDER, TILLER AND TILLER EXTENSION

E.5.1 MANDATORY

(a) **Rudder** blade

(b) Factory supplied gudgeons

(c) Securing apparatus to retain **rudder**

(d) Aluminium tiller

E.5.2 **RUDDER** POSITION

RUDDER POSITION	Minimum	Maximum
1. Maximum projection from the bottom corner of the **rudder** at the trailing edge to the lower datum point when the **rudder** is centered.	1017 mm	1023 mm

Section F – Spars and Rigging

F.1 MANUFACTURER

The **Spars** and **Standing Rigging** shall only be manufactured by a TMH Licensed Manufacturer

F.2 PARTS

(a) **Mast** Sections
(b) **Spreaders**
(c) **Boom**
(d) Gnav
(e) **Bowsprit**
(f) **Standing Rigging**
(g) **Running Rigging**

F.3 MEASUREMENT

The **mast datum point** is the **heel point** on the **mast** tenon.

F.4 MATERIALS, CONSTRUCTION AND DIMENSIONS

Shall comply with the Builders Construction Manual

F.5 **STANDING RIGGING**

F.5.1 MANDATORY

(a) Two-part upper **shroud** and **spreader** tip link plate
(b) Lower **shroud**
(c) **Check stay**
(d) **Forestay**, tri-link plate and furler drum
(e) Factory supplied open bodied turnbuckles
(f) Chain plates

F.6 **RUNNING RIGGING**

F.6.1 CONTROL LINES

(a) MANDATORY
    (1) **Bowsprit** setting line
    (2) Jib sheet
    (3) Jib car control line
    (4) Gennaker **halyard**
    (5) Jib **halyard**
    (6) **Mainsail halyard**
    (7) Cunningham control line
    (8) Jib **halyard** tension line
    (9) GNAV control line

(10) Outhaul control line

(11) Gennaker sheet

(12) Gennaker **tack** line

(13) Mainsheet

(14) Mainsheet bridle

(15) Jib Furler control line

F.6.2 FITTINGS

(a) MANDATORY

(1) Jib Furler leads and cleat

(2) Jib track and traveller car

(3) Jib and traveller car swivel cleats and leads

(4) Jib **halyard** tension cleat and attachments

(5) Gennaker **halyard** turning blocks and attachments

(6) **Mainsail halyard** horn cleat

(7) Cunningham purchase and cleat

(8) Outhaul purchase and cleat

(9) Mainsheet bridle attachments

(10) **Boat** lifting attachments

Section G – Sails

G.1 PARTS

G.1.1 MANDATORY

(a) **Mainsail**

(b) Jib

(c) Gennaker

G.2 GENERAL

G.2.1 RULES

(a) **Sails** shall comply with the **class rules** in force at the time of **certification**.

G.2.2 **CERTIFICATION**

(a) The **official measurer** or representative shall **certify** the **mainsail**, jib and gennaker(s) and shall sign and date the **certification mark**.

(b) The VXCA may appoint one or more **In-House Official Measurers** to measure and **certify sails** produced by a manufacturer.

G.2.3 DEFINITIONS

(a) The **ERS** definitions shall apply.

G.2.4 SAILMAKERS

(a) No license is required.

G.3 MAINSAIL

G.3.1 IDENTIFICATION

(a) The VX One class insignia shall conform with the dimensions and requirements as detailed in the diagram contained in Appendix H.1 and be placed in accordance with the diagram contained in Appendix H.1.

(b) The national letters and **sail** numbers shall comply with the RRS except where prescribed otherwise in these **class rules**.

G.3.2 MATERIALS

(a) Polyester fiber or film.

(b) Battens shall be made of fiberglass.

(c) **Sail reinforcement** shall consist of **ply** build up, webbing and/or pressed rings.

G.3.3 CONSTRUCTION

(a) The construction shall be: **soft sail**, **single-ply sail**.

(b) The **mainsail** shall have 5 **batten pockets** in the **leech**.

(c) The centreline of **Batten pocket** number 2 shall be below the **upper leech point**.

(d) The following are permitted: stitching, glues, tapes, bolt ropes, **corner** eyes, headboard with fixings, cunningham eye or pulley, **batten pocket patches**, **batten pocket** elastic, **batten pocket** end caps, **leech** line with cleat, **window(s)**, tell tales, **sail** shape indicator stripes, **spreader** chafe patch

(e) The **leech** and **head** edge shall not extend beyond straight lines between:

(1) The **Peak Point** and the intersection of the **leech** and the upper edge of the nearest **batten pocket,**

(2) The intersection of the **leech** and the lower edge of a **batten pocket** and the intersection of the **leech** and the upper edge of an adjacent **batten pocket**,

(3) The **clew point** and the intersection of the **leech** and the lower edge of the nearest **batten pocket**,

(4) The **Peak Point** and the **Throat Point**.

G.3.4 WEIGHT: The weight of the **mainsail** shall be no less than 5 kg including battens.

G.3.5 **MAINSAIL** DIMENSIONS

	ERS (2017-2020)	Minimum	Maximum
Mass of **ply** of **body of the sail**		180 g/m^2	
Head Control Point (measured from **Throat Point** to the intersection at the **Head** Edge)		500 mm	
Luff Control Point (measured from **Throat Point** down to the intersection at the **Luff** Edge)		500 mm	
Head Angle Control Length (measured from **Head** Control Point to **Luff** Control Point)		737 mm (95°)	767 mm (100°)
Primary Reinforcement	G.6.1		1000 mm
Secondary Reinforcement	G.6.2	Not limited	
Please refer to **WORLD SAILING ERS** Subsection B G.5 which defines the location of the **leech** points used to measure the **half width** and **quarter width**s (they are measured from the **Peak Point**).			
Quarter Width			2650 mm
Half Width	Subsection A G.7.5		2210 mm
Three-Quarter Width	Subsection A G.7.6		1580 mm
Upper Width	Subsection A G.7.8		1135 mm
Upper Leech Point	Subsection B G.5.5	820 mm	
Clew Diagonal	Subsection B G.7.10(a)		7470 mm
Head Length	Subsection B G.7.13		670 mm
Maximum outside **Batten Pocket Lengths** (numbered top to bottom)			
Pockets 4 and 5	G.8.1(b)		1210 mm
Sail Leech Hollow	G.2.4	0 mm	10 mm
Clew point to intersection of **leech** and centreline of lowermost **batten pocket**		1770 mm	
Sail Numbers and Country Designation height		300 mm	320 mm
Sail number & Country code position from the **leech**		60 mm	200 mm
Country Designation distance from **Peak Point**		3 m starboard	3.5 m port
Sail number distance from **Peak Point**		4 m starboard	4.5 m port

G.4 JIB

G.4.1 MATERIALS

(a) Polyester fiber or film.

(b) Battens shall be made of fiberglass.

G.4.2 CONSTRUCTION

(a) The construction shall be: soft, **single-ply** or **laminated ply**.

(b) **Sail** reinforcement shall consist of **ply** build-up, webbing and/or pressed ring.

(c) The **jib** shall have 2 **batten pockets** in the **leech**.

(d) The following are permitted: stitching, glues, tapes, **corner** eyes, **batten pocket** elastic, **batten pocket patches**, **batten pocket** end caps, **leech** line with cleat, **windows**, tell tales, **sail** shape indicator stripes

G.4.3 WEIGHT: The weight of the **jib** shall be no less than 2.2 kg including battens.

G.4.4 JIB DIMENSIONS

	ERS (2017-2020)	Minimum	Maximum
Mass of **ply** of the **body of the sail**		180 g/m^2	
Foot Length	G.7.1		2215 mm
Leech Length	G.7.2		5705 mm
Luff Length	G.7.3		6320 mm
Quarter Width (**luff** zipper closed)	G.7.4		1568mm
Half Width (**luff** zipper closed)	G.7.5		1104 mm
Three-Quarter Width (**luff** zipper closed)	G.7.6		614 mm
Top Width	G.7.8		65 mm
Foot Median	G.7.11		6030 mm
Primary Reinforcement	G.6.1		350 mm
Secondary Reinforcement	G.6.2	Not limited	
Maximum outside **batten pocket lengths** Pocket 1 (top) Pocket 2 (bottom)	G.8.1(b)		 560 mm 845 mm
Head point to intersection of **leech** and centreline of uppermost **batten pocket**		1795 mm	
Clew point to intersection of **leech** and centreline of lowermost **batten pocket**		1895 mm	

G.5 GENNAKER

G.5.1 MATERIALS

(a) The **ply** fibers shall consist of nylon.

(b) **Sail reinforcement** shall consist of **ply** build up and or webbing straps.

G.5.2 CONSTRUCTION

(a) The construction shall be: **soft sail**, **single-ply sail**

(b)) Permitted: Stitching, glues, tapes, corner eyes, recovery line eyes, tell tales

G.5.3 GENNAKER DIMENSIONS

	ERS (2017-2020)	Minimum	Maximum
Mass of **ply** of the **body of the sail**		37 g/m^2	
Primary Reinforcement	G.6.1		1000 mm
Secondary Reinforcement	G.6.2	Not limited	
Foot Length	G.7.1		4328 mm
Leech Length	G.7.2		6515 mm
Luff Length	G.7.3		8515 mm
Quarter Width	G.7.4		4665 mm
Half Width	G.7.5		4175 mm
Three-Quarter Width	G.7.6		2405 mm
Foot Median	G.7.11		7760 mm

PART III – APPENDICES

Section H

APPENDIX H.1 Insignia .....
APPENDIX H.2 Certified Equipment Label .....
APPENDIX H.3 VXCA Optional Bow Numbers .....
APPENDIX H.4 Regatta Guidelines.....

APPENDIX H.1 INSIGNIA

H.1.1 Specification

(a) Digital format is available from bennettyachting@gmail.com

H.1.2 Mainsail

(a) Logo is 187 mm high by 670 mm wide

(b) Location is between battens 2 and 3 and oriented parallel to either **sail head** edge or battens. Aft edge is 150-200 mm from the **leech**.

H.1.3 Hull Location

(a) Logo is 100 mm high by 360 mm wide.

(b) Aft edge is 100-200 mm from aft tank edge on both port and starboard **hull** liner.

APPENDIX H.2 Certified Equipment Label

H.2.1. 2012-present:

APPENDIX H.3 VXCA OPTIONAL BOW NUMBERS

H.3.1 Prefabricated VXCA Class Bow Number graphics may be purchased through the TMH office (bennettyachting@gmail.com).

H.3.2 Placement

(a) Top edge parallel to and 75 mm below the gunnel

(d) Leading edge 150 mm behind the bow stem

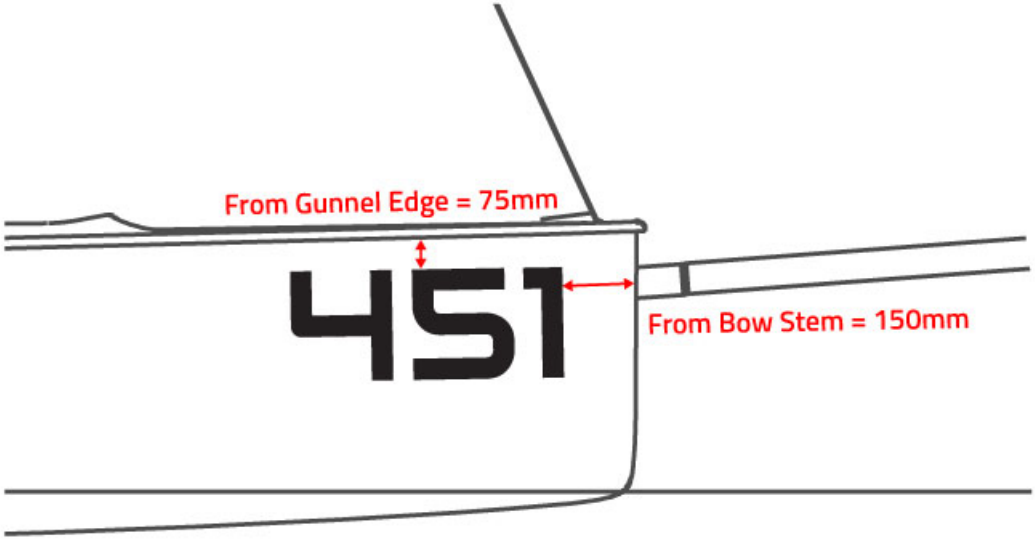

APPENDIX H.4 REGATTA GUIDELINES

This appendix is included to guide regatta organizers and race officers in creating and executing VX One class *racing*.

H.4.1 Race Management

(A) For one-design class events races shall not be *started* when the median wind speed is below 4 knots or exceeds 26 knots. It will remain at the discretion of the *PRO* to abandon a race when any of these conditions persist. Sailing instructions may alter these limits.

(B) If after the *start*, the median wind speed falls below 4 kts or exceeds 26 kts for a period of 15 minutes, it is recommended for the *PRO* to abandon *racing*.

(C) Set mark races should consist of approximately equal upwind and downwind distances.

(D) If a time limit is deemed necessary, the time limit after the first **boat** finishes should be 30 minutes.

(E) The Race Committee is encouraged to use VHF radios to communicate with the fleet and individual competitors.

(F) Competitors are encouraged to select a VX One competitor to serve as a VX One fleet liaison with the racecourse *PRO*.

H.4.2 Scoring

(A) For short series scoring the Low Point Scoring system of the RRS Appendix A is recommended.

(B) Three completed races may constitute a series.

(C) When fewer than 6 races have been completed, a boat's series score may be the total of her race scores.

(D) When six or more races have been completed, a boat's series score may be the total of her race scores excluding her worst score.

(E) For long series scoring the High-Point Percentage Scoring System in the US Sailing Prescriptions to the RRS (2017–2020) Appendix A is recommended.

H.4.3 Bow Numbers

(A) Use of VXCA bow numbers which reference the **hull** and **sail** number are encouraged.